This document contains proprietary information and such informationmay not be disclosed to others for any purposes,
nor used for sales/marketing/procurement purposes without written permission
本文件包含专有信息，没有书面许可，该信息不能以任何形式披露给第三方，也不能用于任何目的的买卖，销售及采购。

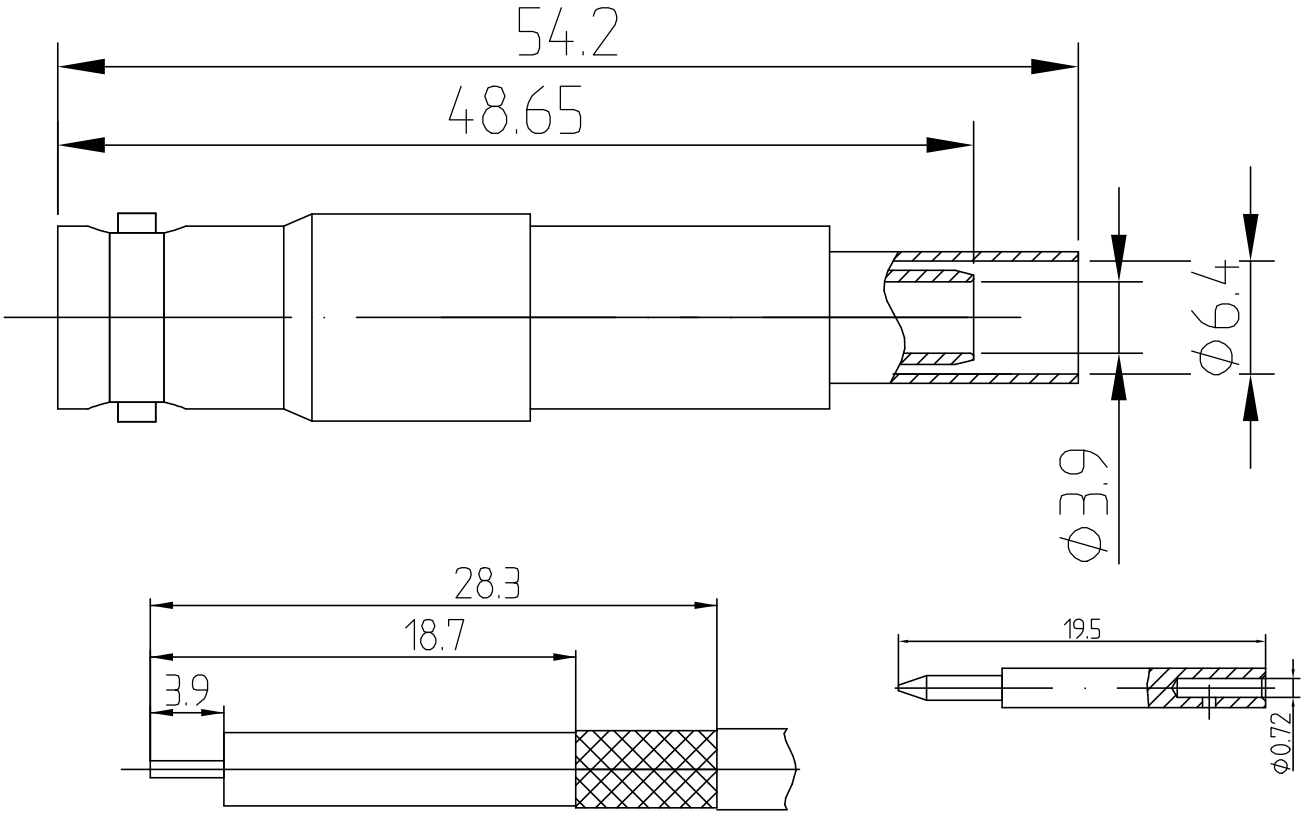

1 Electrical
1.1Impedance: 50 Ω
1.2Frequency:DC-300MHz
2 Mechanical
2.1 Center contact: solder
2.2 Outer contact: crimped
2.3 Weight: 0.018 kg
2.4 Suitable cable: RG59 B/U
3 Environmental
3.1 Operating temperature -65° to 165°
3.2 RoHs compliant
4 Material&Finish
4.1 Inner Contact: brass, gold plated
4.2 Outer Contact: nickel,gold plated
4.3 Insulators: PTFE

FIRST ANGLE PROJECTION / THIRD ANGLE PROJECTION	SCALE 1:1	SHV-J6Y SHV male for RG59 cable	UNITS mm REV V1.0	UNLESS OTHERWISE SPECIFIED DIMENSIONSARE mm, TOLERANCES ARE: FRACTIONS DECIMALS ANGLES .X± .20 ± 1° .XX± .10 .XXX±
	NAME DATE			
DRAWN	Tomson Tang 1-3-12			
CHECKED	Magi Wang 1-3-12			
APPROVED	Teresa Shen 1-3-12	Xi'an T-rely Electronics Co.,Ltd.		