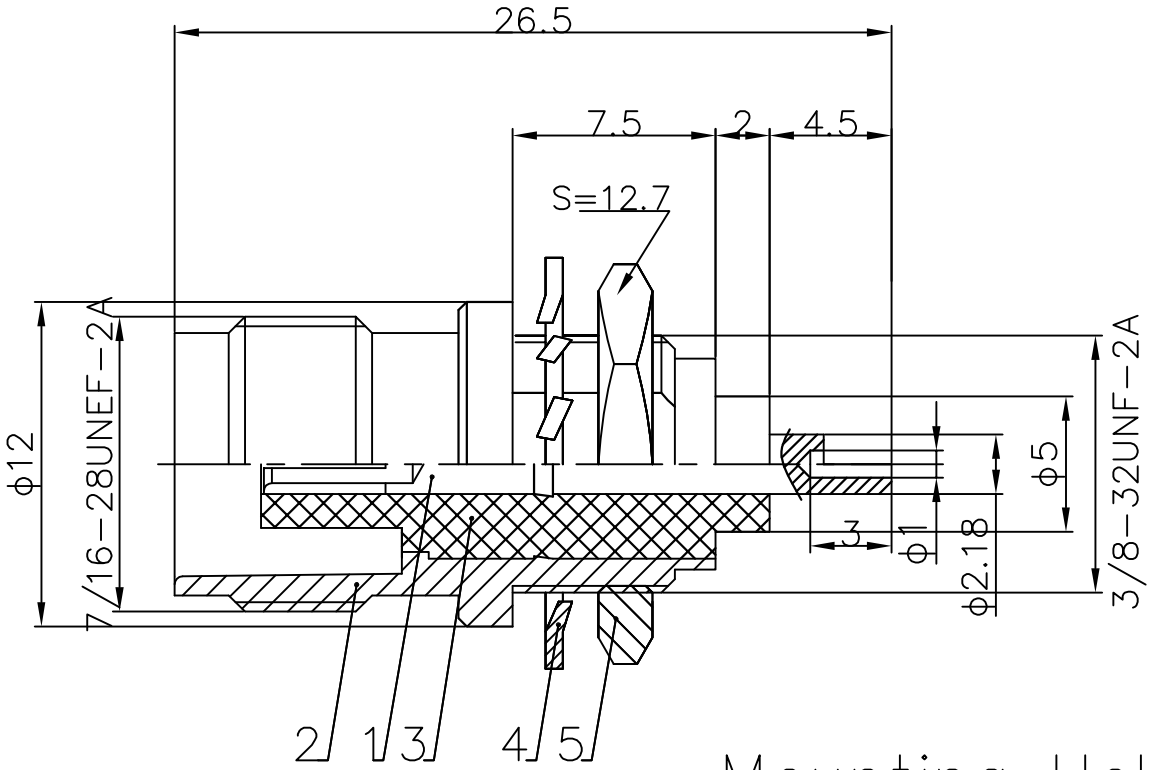

Mounting Hole

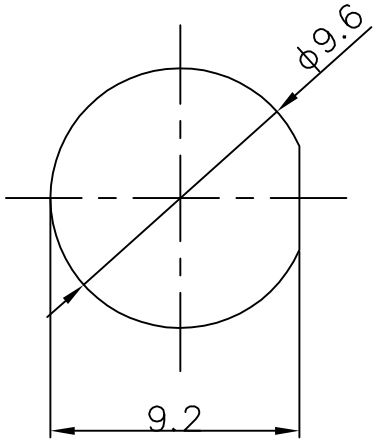

Electrical characteristics
Impedance:50 Ω
Working voltage: ≤500V
Dielectric withstanding voltage:≥1500V
Insulation resistance:≥5000MΩ

NO.	DESCRIPTION	Q'TY	MATERIAL	PLATING
5	NUT	1	BRASS	Nickel
4	GASKET	1	Phospher	Nickel
3	INSULATOR	1	TEFLON	
2	BODY	1	BRASS	Nickel
1	Inner contact	1	Phospher	Glod

CUSTOMER	DATE 7-Sep-10	T-RELY ELECTRONICS	
	APPROVED BY Jason	TITLE	
CUSTOMER CODE	CHECKED BY Mike Wang	TNC-50KY	
	DRAWN BY Tomson Tang		
	SCALE 2/1 / UNIT mm	A4	DWG NO. / SHEET